Fixing Instructions

GA Panels with GA Posi-Grip Instant Access Framing Type WC4

These instructions tell you about installing GA Panels with GA Posi-Grip Instant Access Framing Type WC4.

Please read these instructions before using this product. If there is anything you do not understand or if you want to know more about this item, please contact GA.

GA Panels must be installed by suitably qualified contractors with the required knowledge and expertise. Current standard construction methods must be used.

The installation contractor has the responsibility and duty to ensure proper safety so that during and after completion of the installation the panels remain safely secured to the fixing surface.

Before beginning installation also refer to GA Sitework Data Sheet for additional guidance on Off-loading, Site Storage and Installation.

Step 1: Carefully unpack the materials.

Step 2: Inspect the panels and the GA Posi-Grip Instant Access components to ensure these are undamaged.

Step 3: Offer up the GA Posi-Grip Instant Access Fixing strips to the fixing surface and mark out the (7mm dia.) clearance holes (ready to accept the nylon inserts and stainless steel pins).

Step 4: Secure the GA Posi-Grip Instant Access fixing strips to the fixing surface by using suitable screws/fixings (No.6 size supplied by others). It is essential that all of the fixing holes are utilised.

Step 5: Push-fit the nylon inserts into the larger holes on the GA Posi-Grip Instant Access fixing strips.

Step 6: Insert the stainless steel pins into the recessed groove on the rear of the GA Posi-Grip frame, making sure these match the number of nylon inserts.

Step 7: Laterally adjust the location of the stainless steel pins to align with the nylon inserts and push-fit the panel into position.

NB GA Panels supplied by Gooding Aluminium are not intended to have electrical wiring installed. Where this is a requirement the specifier and installer should ensure that all Regulations have been complied with and in particular that consideration has been given to the CENELEC HD 384 series of documents.
(CENELEC HD 384 Series: Electrical Safety in Buildings (20 Parts)).

Issue 1:5/08

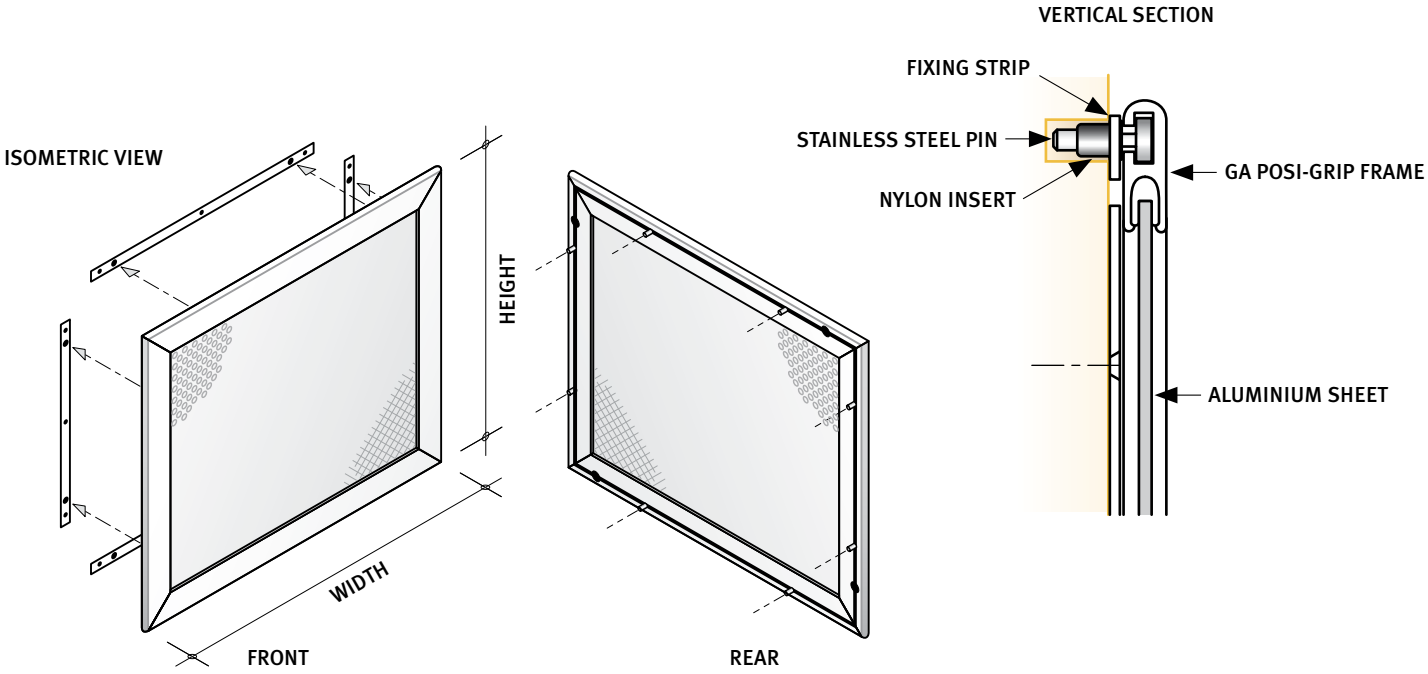

GA Helpline 020 8692 2255 Mon-Fri 8.30am-5pm for professional assistance
www.goodingalum.com sales@goodingalum.com
© 2008 Gooding Aluminium Limited